Data Sheet

SS/ZGP2 Issue 8

# High Temperature Zirconia Oxygen Probe

## ZGP2 Series

- **Dependable**
  - measurement of $O_2$ in a wide variety of processes
  - virtually instantaneous response
  - resistance to sulphurous reducing atmospheres
- **Versatile**
  - 600 to 1250 mm (2 to 4 ft) lengths
  - choice of protective sheath materials
  - integral thermocouple for automatic temperature compensation
- **Low cost-of-ownership**
  - in situ measurement
  - no sampling system required
  - test gas port for in situ probe verification


Superior technology and quality from the world leader in oxygen measurement

## Introduction

The ZGP2 Zirconia Oxygen Probe is designed to measure oxygen in oxidizing, and some reducing, furnace atmospheres. When used in conjunction with an appropriate electronics unit the probe output voltage may be converted to a signal related either to oxygen concentration (%$O_2$, ppm $O_2$) or oxidizing potential (kilocalories or millivolts) terms.

Concentration terms are usually applicable to measurements in oxidizing atmospheres and potential terms are used for reducing atmospheres.

The probe provides a true measurement of the atmospheric conditions in situ and permits continuous and accurate measurement over a wide temperature range, without the frequent maintenance associated with external sampling systems. It also eliminates 'equilibrium shift' that is common to systems in which gas samples are cooled before measurement, and has a fast response to changes in atmosphere enabling rapid corrective action to be taken when necessary.o-use, low-maintenance system for dissolved oxygen measurement.

### Applications

- Annealing furnace atmosphere monitoring
- Sintering of metals
- Reheat furnaces
- Ferrite sintering
- Whiteheart malleablizing
- Combustion measurement and control in soaking pits
- Process heaters
- Fluid bed boilers
- High temperature incinerators
- Other combustion processes where the flue gas temperature is in excess of 600 °C (1112 °F)

## Principle of Operation

The probe comprises a ceramic detector cell housed in a protective sheath. A thermocouple is fitted within the probe to enable the process temperature to be monitored and provide automatic temperature compensation. A connector head (protected to IP56) enables connection of the cell output, thermocouple and reference air connections.

The sheath material can be:

**Aluminous porcelain**
for oxidizing atmospheres at temperatures up to 1250 °C (2284 °F) where limited amounts of corrosive chemicals are present

**Recrystallized alumina**
for reducing/oxidizing atmospheres at temperatures up to 1400 °C (2552 °F) and where corrosive chemicals are present

**Incoloy 800**
for reducing/oxidizing atmospheres at temperatures up to 850 °C (1562 °F) when mounted horizontally and up to 1000 °C (1832 °F) when mounted vertically.

A calibration gas inlet port is provided to enable the probe to be checked using test gas mixtures without removing it from the process.

Reference air (500 to 1000 ml/min [1 to 2 $ft^3$/hr]) is required for accurate operation and can be supplied from an ABB mains-powered pump unit or a flow-regulator unit.

## Overall Dimensions

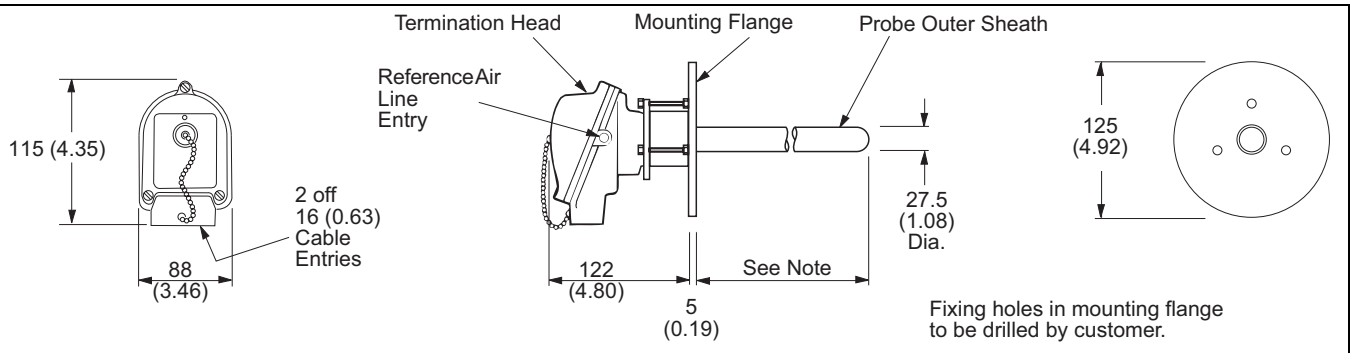


**Note**. See the ordering information on page 4.

## Specification

**Temperature range**

600 to 1250 °C (1112 to 2282 °F) continuous

1400 °C (2552 °F) max.

**Measuring range**

Refer to 'Operating Limits' diagram (below). The lower limit of operation, determined by the onset of electronic conduction in the solid electrolyte, is dependent on temperature.

The following limits are given as a guide for 1 % electronic conduction but, in practice, it may be possible to measure at even lower oxygen potential levels without introducing significant errors.

| Temperature Concentration | | Minimum $O_2$ Output | Minimum $O_2$ Potential | | |
|---|---|---|---|---|---|
| °C | °F | Kcals | bar | psi | mV |
| 600 | 1112 | –145 | $10^{-36}$ | $145^{-36}$ | 1532 |
| 900 | 1652 | –132 | $10^{-25}$ | $145^{-25}$ | 1391 |
| 1200 | 2192 | –117 | $10^{-17}$ | $145^{-17}$ | 1228 |

**Response rate**

<42 s to 63 % of final value, <47 s to 90 % of final value

**Reference air**

Clean oil-free air

Flow rate 500 to 1000 ml/minute (1 to 2 $ft^3$/hr)

**Construction**

| | |
|---|---|
| Solid electrolyte | stabilized zirconia oxide |
| Protective sheath | aluminous porcelain<br>Incoloy 800<br>recrystallized alumina |

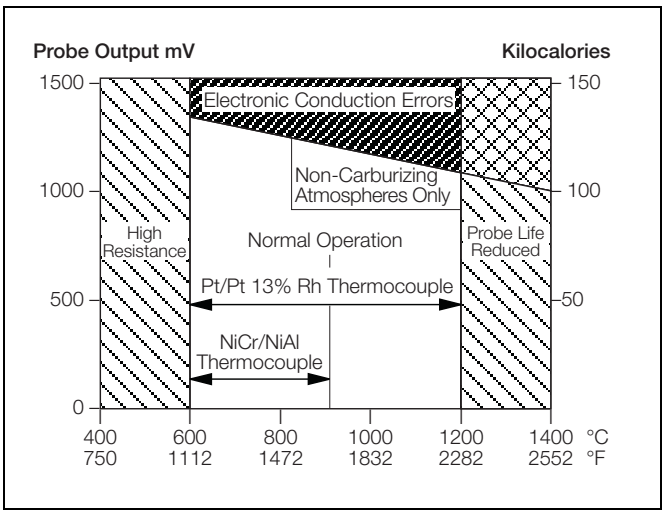


*Operating Limits*

**Mounting**

Vertical or horizontal 42 mm (1.65 in) minimum hole diameter

**Connecting cable**

2-core copper, overall screened for probe output

2-core compensating cable to suit thermocouple fitted

**Thermocouple**

| | |
|---|---|
| Pt/Pt 13 % Rh – EN 60584.1 Pt2 type R | 600 to 1250 °C<br>(1112 to 2282 °F) |
| NiCr/NiAl – Pt4 EN 60584.1 Pt4 type K | 600 to 900 °C<br>(1112 to 1652 °F) |

**Weight**

2.5 kg (5.5 lb) nett (600 mm [22 in] probe)

2.8 kg (6.2 lb) nett (1000 mm [37.5 in] probe)

| ZGP2 Series High Temperature Zirconia Oxygen Probe | ZGP2/ | X | X | X | X | X |
|---|---|---|---|---|---|---|
| **Nominal Insertion Length mm (in)** | | | | | | |
| 600 (23.6) | | 1 | | | | |
| 1000 (39.4) | | 2 | | | | |
| 700 (27.6) | | 3 | | | | |
| 800 (31.5) | | 4 | | | | |
| 900 (35.5) | | 5 | | | | |
| 1250 (49.2) | | 6 | | | | |
| Special | | 9 | | | | |
| **Thermocouple** | | | | | | |
| Pt/Pt 13% Rh EN 60584.1 Pt2 Type R | | | 1 | | | |
| NiCr/NiAl EN 60584 Pt4 Type K | | | 2 | | | |
| Pt/Pt 10% RH EN 60584.1 Pt 1 Type S | | | 3 | | | |
| Special | | | 9 | | | |
| **Sheath** | | | | | | |
| Aluminous porcelain (Standard) | | | | 1 | | |
| Incoloy 800 | | | | 2 | | |
| Recrystallized alumina | | | | 3 | | |
| Special | | | | 9 | | |
| **Mounting** | | | | | | |
| Standard | | | | | 1 | |
| 1 in NPT | | | | | 2 | |
| Special | | | | | 9 | |
| **Termination Head** | | | | | | |
| Twin-gland type C95 | | | | | | 1 |

**ABB** has Sales & Customer Support expertise in over 100 countries worldwide

**www.abb.com**

The Company's policy is one of continuous product improvement and the right is reserved to modify the information contained herein without notice.

Printed in UK (12.07)



SS/ZGP2 Issue 8

**ABB Limited**
Oldends Lane, Stonehouse
Gloucestershire
GL10 3TA
UK
Tel: +44 (0)1453 826661
Fax: +44 (0)1453 829671

**ABB Inc.**
Analytical Instruments
9716 S. Virginia St., Ste. E
Reno, Nevada 89521
USA
Tel: +1 775 850 4800
Fax: +1 775 850 4808