Data Sheet
D-NCA-TB84TE_2

Analytical Instruments
Advantage Series™
Two-Electrode Conductivity Analyzer
TB84TE

- **Patented smart key menu programming.**
- **Superior accuracy in low conductivity and pure water applications.**
- **Two fully programmable isolated outputs:** Zero to 20 mA/four to 20 mA.
- **Three fully programmable relay outputs.**
- **Compatible with complete line of ABB two-electrode conductivity sensors.**
- **Back-lit display for easy viewing.**
- **Adjustable damping.**
- **Hold output function:** Holds all outputs or any individual output.
- **Programmable security codes and configuration lockout.**
- **Universal power supply:** 120/240 VAC, 50/60 Hz. Voltage range is 94 to 276 VAC.
- **Temperature compensation modes include three for pure water.**
- **NEMA 4X/IP65 housing:** Cast aluminum with corrosion resistant powder coat finish.
- **FM and CSA non-incentive agency approvals.** CE Mark.

TB84TE - a leap forward in two-electrode conductivity analyzer technology.

Advantage Series™ Two-Wire, Two-Electrode Conductivity

The ABB TB84TE Advantage™ Conductivity Analyzer is a unique and advanced microprocessor-based instrument. Smart keys on the front panel provide local programming of all analyzer functions. Easy-to-follow instructions appear above each smart key. A secondary display clearly defines each menu option during programming. When the analyzer is in the normal operating mode, the secondary display shows several useful parameters. This innovative, user-friendly interface provides straightforward analyzer operation, configuration, and calibration. Standard outputs include two isolated analog (current) outputs and three relay outputs. The analog outputs can be configured for the process variable (PV) and/or temperature. The relay outputs can be configured for the PV, temperature, diagnostics, cycle timer controller, or sensor cleaner.

The TB84TE analyzer is compatible with all ABB two-electrode conductivity sensors. It automatically ranges itself across three decades of conductivity resolution for any single cell constant. Two-electrode sensors provide accurate conductivity measurements in lower conductivity solutions and pure water. Precalibration is accomplished by programming the cell constant of the sensor during configuration. Careful selection of electrode materials (316 stainless steel standard), insulator materials, and electrode spacing provides rugged sensors and reduced sensor maintenance. Sensor diagnostics include sensor polarization, and open or shorted temperature compensator/cabling.

The TB84TE analyzer meets current CE, NEMA 4X, and IP65 requirements.

Two-Electrode Sensor Compatibility

The analyzer accepts inputs from all ABB two-electrode sensors. A menu choice during configuration makes changing from one cell constant to another easy. No jumpers or manual adjustments are required.

Two-Electrode Sensor Ranges

Cell Constant	Conductivity Range	Display Resolution	Autorange
0.01	0 to 199 µS/cm	0.001 µS/cm	1.999 to 19.99 to 199.9 µS/cm
0.10	0 to 1,999 µS/cm	0.01 µS/cm	19.99 to 199.9 to 1,999 µS/cm
1.00	0 to 19.99 mS/cm	0.1 µS/cm	199.9 µS/cm to 1,999 µS/cm to 19.99 mS/cm

Basic or Advanced Programming

The Basic or Advanced programming mode can be chosen at the time of purchase. The Advanced mode has an expanded set of functions intended for complex applications. Separating the Basic and Advanced modes simplifies setup and calibration activities. The Advanced configuration choices are:

- ***Concentration analyzer:*** User-defined through a six-point conductivity versus concentration linear curve fit where output follows concentration. Engineering unit choices are percent (%), parts per million (ppm), parts per billion (ppb), and user-defined.
- ***Temperature compensation types:*** Pure water neutral salt, pure water trace base, pure water trace acid, user-defined function generator.
- ***Analog pulse diagnostic output.***
- ***Nonlinear output:*** User-defined through a six-point conductivity versus desired current output that best fits the nonlinear relationship.
- ***Expanded relay functions and flexibility.***

Analog Outputs

The analyzer has two isolated analog outputs (AO1 and AO2). Each is user-configurable as either a zero to 20 or a four to 20-milliampere signal. AO1 is dedicated to the PV while AO2 is configurable for either the PV or temperature. A two-point calibration method applies to both analog outputs. This allows adjustment of the analog outputs to compensate for other devices in the loop that may not be calibrated. Entering the PV or temperature endpoints in reverse order allows for reverse-acting outputs.

A capacitive type lag, applied via the damping function, is useful in process environments where noise is present. Damping is supported for both analog outputs and the displayed PV, and has a maximum value of 99.9 seconds. One damping value affects both analog outputs and the displayed PV in basic configurations. Individual damping values affect each analog output and the displayed PV in advanced configurations.

Relay Outputs

The analyzer has three relay outputs available (RO1, RO2, RO3). Each is jumper selectable as either normally open (NO) or normally closed (NC). *RELAY*, followed by the corresponding relay number, appears on the display when a relay activates. The functionality of each relay output depends on the configuration mode. Table 1 shows the possible functionality of each relay output for basic and advanced configurations. Advanced programming allows all function choices shown in Table 1 for each of the three relay outputs.

Table 1. Relay Output Functionality [1]

Function	RO1		RO2		RO3	
	Basic	Adv	Basic	Adv	Basic	Adv
High or low PV alarm	•	•	•	•	•	•
High or low temperature alarm (ºC or ºF)		•	•	•	•	•
Diagnostics alarm		•		•	•	•
High or low cycle timer		•		•		•
Sensor cleaner [2]		•		•		•

Notes:

1. • = available

2. If a relay output has been configured as a sensor cleaner, no other relay output can be used for this function

High and low alarms can be chosen for the PV and temperature in either degrees Celsius or degrees Fahrenheit. Each has a user-selectable deadband and time delay designed to control relay functions and prevent problems like relay chatter. The diagnostic relays can be linked to sensor diagnostics, analyzer diagnostics, or all diagnostic conditions. The high and low cycle timer has adjustable set points, cycle time, and on time. The cycle timer allows a waiting period to see the results of chemical addition by interrupting the feed. The sensor cleaner feature provides for cycle time, on time, and recovery time programming. This makes set up and operation of the analyzer with the ABB hydraulic sensor cleaner or Model TB18 Safe-T-Clean® Sensor Valve easy and trouble free.

Diagnostics

The TB84TE analyzer constantly monitors both the sensor and the analyzer. This helps to ensure reliability and accuracy. Upon detection of a diagnostic condition, the analyzer provides diagnostic notification by flashing *FAULT* on the display and supplying a pulse on AO1 (if activated). Pressing the *FAULT info* smart key stops *FAULT* from flashing and provides, on the secondary display, a short description and fault code. *FAULT* remains on until resolution of the problem. Sensor faults that activate the diagnostic notification are:

- Sensor polarization.
- Shorted or open temperature compensator.

Hold Output

The analyzer has a hold output state that improves plant safety and process integrity during maintenance and calibration. When activated, *HOLD* appears at the top of the display. Upon release of the hold state, *HOLD* disappears. When the sensor cleaner option is chosen, the analyzer provides the option of holding all analog and relay outputs during the cleaning cycle. The analog outputs can be held to any preselected level. The relay outputs can be held individually to any active or inactive state. This is useful for checking and exercising any external devices connected to the analyzer.

Diagnostic Pulse

The analog output is fully scalable over any conductivity or concentration range. Advanced configurations allow pulsing of AO1 during a diagnostic condition.

When the diagnostic pulse is active, the output is modulated for one second out of a six-second repeating cycle to a configuration selectable level ranging from one to 100 percent of span (0.16 to 16 milliamperes for a four to 20-milliampere output or 0.20 to 20 milliamperes for a zero to 20-milliampere output). Should the actual output of the analyzer be below 12 milliamperes, the pulse will add current; if the actual output is at or above 12 milliamperes, it will subtract current. This provides remote notification of a problem with proper configuration of a digital control system (DCS), programmable logic controller (PLC), or chart recorder.

Temperature Compensation

The TB84TE analyzer is compatible with either Pt 100 or PT 1000 temperature compensators. The automatic temperature compensation options are: manual, automatic for potassium chloride (KCl), user-entered coefficient in percent per degree Celsius, a user-defined function generator, and trace acid, trace base, and neutral salt for pure water.

Calibration

Smart key programming makes analyzer calibration accurate and efficient. Process calibration is a straight-forward one-point smart calibration resulting in either a slope adjustment, offset adjustment, or a combination of adjustments. Selecting the reset calibration state results in the calibration defaulting to the original factory calibration. A one-point smart temperature calibration also exists. This calibration adjusts either the temperature slope, offset, or a combination. A special edit calibration state allows manual editing or adjusting of the calibration data. This feature is useful during a startup where a large number of similar loops are being set up and calibrated at the same time. Calibration of the zero to 20-milliampere or four to 20-milliampere output is allowed via an easy two-point procedure.

Programmable Security Code

The analyzer has one three-digit security code. Menu-selectable choices allow the security code to be applied to none of or any combination of these menu choices: calibrate, output/hold, setpoint/tune, and configure.

Specifications

Type Conductivity analyzer

Input Voltage 120/240 VAC, 50/60 Hz
Range: 94 to 276 VAC
Installation category: II

Power Consumption: 17 VA max.

Input Type
ABB 2-electrode conductivity sensors

Input Range
Conductivity: 0.000 µS/cm to 19.99 µS/cm

Input Range
Conductivity: 0.000 µS/cm to 19.99 mS/cm
Concentration: 0.000 to 1,999 digits (engineering units configurable)

Display Resolution
Conductivity: 0.001 µS/cm, 0.01 µS/cm, 0.1 µS/cm (cell constant dependent)
Concentration: 0.001 digits (configurable)
Temperature: 1ºC, 1ºF

Temperature Compensation Types
Pt 100, Pt 1000

Temperature Compensation
Manual (0.1N KCl based)

Automatic, configurable as: standard (0.1N KCl based), user-defined coefficient (0 to 9.99%/ºC), pure water - neutral salt, pure water - acid, pure water - base, user-defined function generator.

Analog Ouput Ratings
2, completely isolated 0 to 20 mA or 4 to 20 mA outputs, 750 Ω max. load value, AO1 fixed to PV, AO2 configurable to either PV or temperature.

AO1
Conductivity/concentration - isolated 0 to 20 mA or 4 to 20mA, direct or reverse-acting, linear and nonlinear, configurable across full range.

Minimum span:

1.00 Cell Constant	100.0 µS/cm
0.10 Cell Constant	10.00 µS/cm
0.01 Cell Constant	1.000 µS/cm
Concentration	5% max. concentration range

Maximum span:

1.00 Cell Constant	19.99 mS/cm
0.10 Cell Constant	1,999 µS/cm
0.01 Cell Constant	199.9 µS/cm
Concentration	1,999 digits

AO2

Conductivity/concentration/temperature (ºC or ºF) - Isolated 0 to 20 mA or 4 to 20 mA, direct or reverse-acting, configurable across full range

Minimum span:

1.00 Cell Constant	100.0 µS/cm
0.10 Cell Constant	10.00 µS/cm
0.01 Cell Constant	1.00 µS/cm
Concentration	5% max. concentration range
Temperature	10ºC, 18ºF

Maximum span:

1.00 Cell Constant	19.99 mS/cm
0.10 Cell Constant	1,999 µS/cm
0.01 Cell Constant	199.9 µS/cm
Concentration	1,999 digits
Temperature	300ºC, 540ºF

Relay Outputs

Form C, SPDT relays that are jumper selectable as either normally open or normally closed. Refer to Table 1 to see functionality of each relay output in basic and advanced configurations.

Ratings:

Max. AC capacity	100 VA, 240 VAC, 3 A
Max. DC capacity	50 W, 24 VDC, 2 A

High and low set points (Basic and Advanced configurations):

Source: Conductivity and concentration

High/low/deadband	Software configurable
Delay value range	00.0 to 99.9 min.

Source: Temperature (ºC to ºF)

High and low range	0º to 300ºC or 32º to 572ºF
Deadband range	0º to 10ºC or 0º to 18ºF
Delay value range	00.0 to 99.9 min.

High or low cycle timer (Advanced configurations only)

Source: Conductivity and concentration

Turn on range	Software configurable
Cycle time and on time range	00.0 to 99.9 min.

Sensor Cleaner (advanced configurations only)

Cycle time range	00.0 to 99.9 hr.
On time range	00.0 to 99.9 min.
Recovery time range	00.0 to 99.9 min.
Turn on range	Software configurable

Nonlinearity and Repeatability

Conductivity:

Display	±1.0% of measurement range per decade.
Output	±0.02 mA at full scale output settings

Temperature: 1ºC

Maximum Sensor Cable Length

30.5 m (100 ft)

Turn On Time 2 secs typical, 4 secs max.

Load Resistance Range (analog outputs)

750 Ω max.

Damping Continuously adjustable from 00.0 to 99.9 secs

Dynamic Response 3 sec for 90% step change with 00.0 sec damping

Mounting Position Effect

None

Environmental

Temperature:

Operating:	-20º to 60ºC (-4º to 140ºF)
Storage:	-40º to 70ºC (-40º to 158ºF)

Humidity (operating and storage): Will meet specifications to 95% RH

Housing

NEMA 4X and IP65, aluminum alloy with corrision resistant polyester powder coating.

Conduit Connection

5 total, 2 each 0.875-in. holes in enclosure that accept 1/2-in. hubs, 3 each 0.600-in. holes that accept PG9 hubs.

Size (1/2 DIN)

h x w x d:	144.0 x 144.0 x 171.0 mm (5.67 x 5.67 x 6.73 in.)
Min. panel depth	144.8 mm (5.70 in.)
Max. panel thickness	9.5 mm (0.38 in.)
Panel cutout:	135.4 (+1.3, -0.8) by 135.4(+1.3, -0.8) mm (5.33 (+0.05, -0.03) by 5.33 (+0.05, -0.03) in.)

Weight 2.1 kg (4.6 lbs), 3.4 kg (7.5 lbs) with pipe mounting hardware

Agency Certifications

CSA:
- Class I; Division 2, Groups A, B, C, and D
- Class II; Division 2, Groups E, F, and G
- Class III; Division 2

FM: Nonincendive
- Class I; Division 2, Groups A, B, C, and D
- Class II; Division 2, Groups F and G
- Class III; Division 2

EMC Requirements

CE certified - complies with all applicable European Community product requirements, specifically those required to display the CE marking on the product nameplate.

Specifications Subject to Change without Notice.

Installation Accessories

Number	Description
4TB9515-0123	Panel mounting kit
4TB9515-0124	Pipe mounting kit
4TB9515-0125	Hinge mounting kit
4TB9515-0156	Wall mounting kit
4TB9515-0165	Cable grip for ½-inch hubs
4TB9515-0191	Cable grip for PG9 hubs
4TB9515-0198	Complete cable grip kit (2 each ½-inch and 3 each PG9)

Wiring and Installation Diagrams

Figures 1, 2, 3, 4 and 5 show the wiring and installation diagrams.

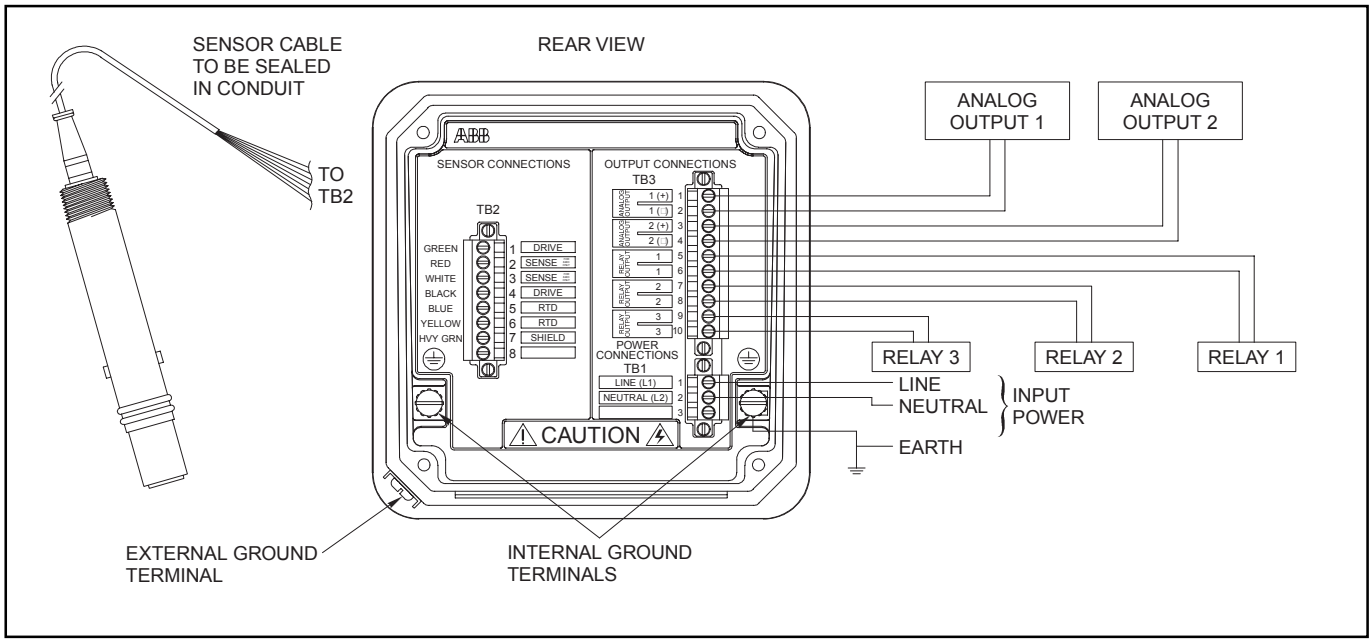

Figure 1. Wiring

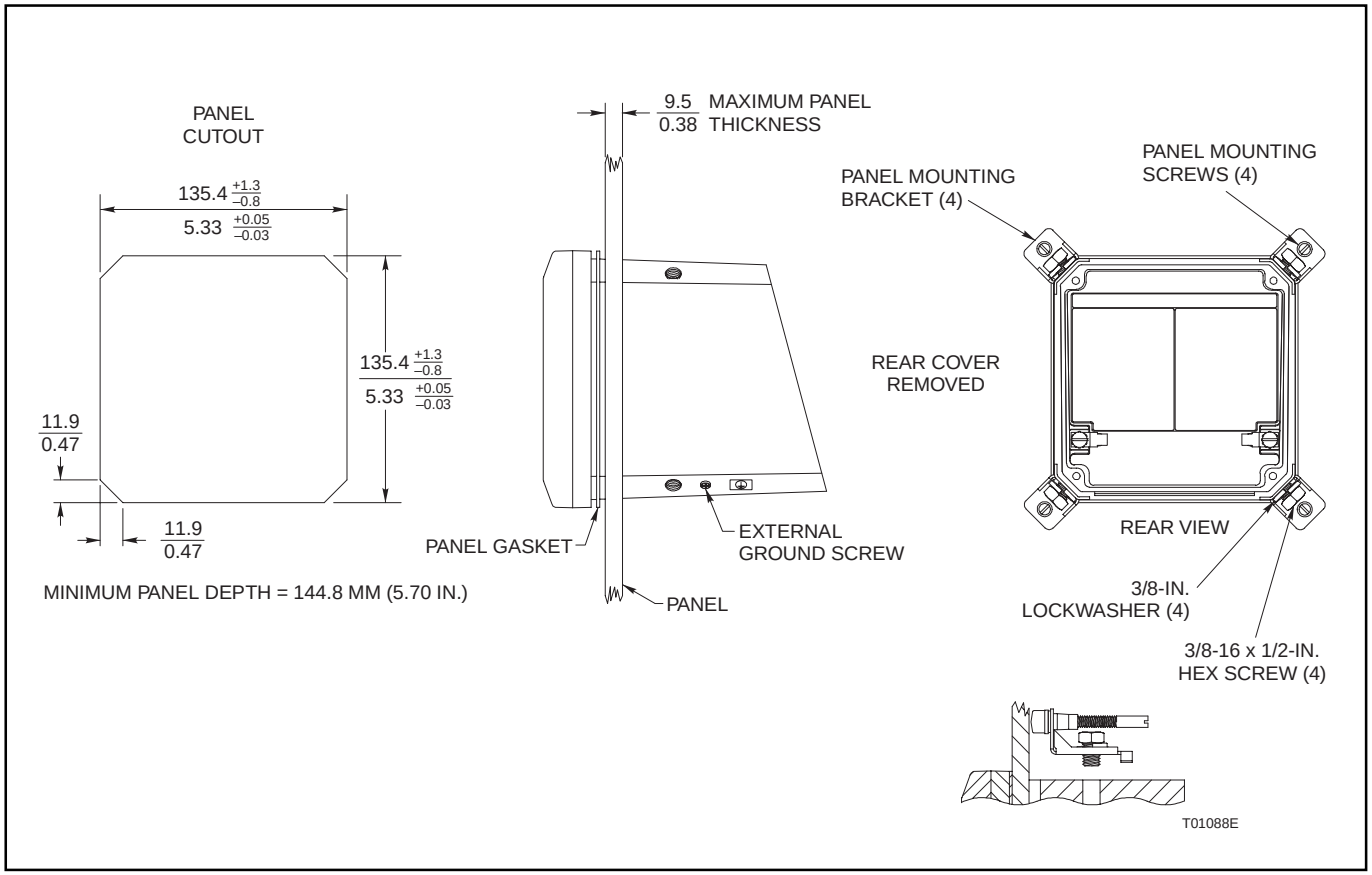

Figure 2. Panel Mounting

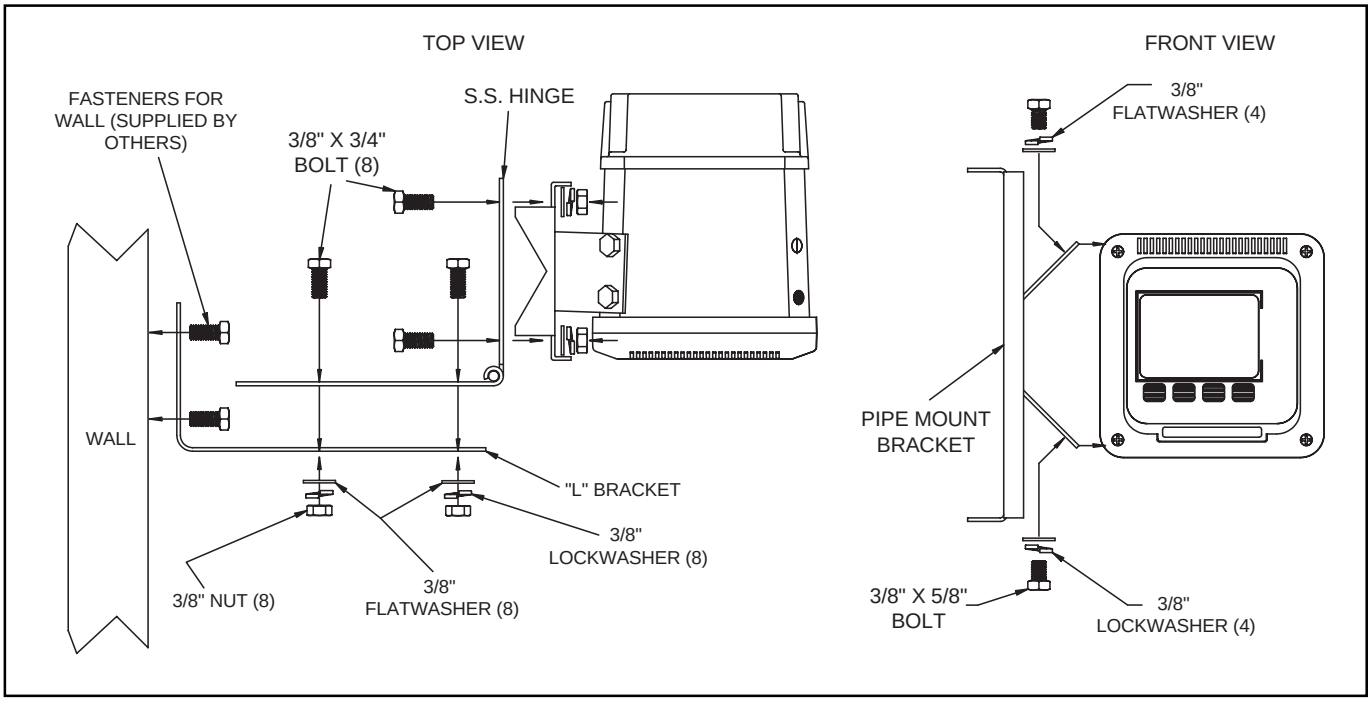

Figure 3. Wall/Hinge Rear Mounting

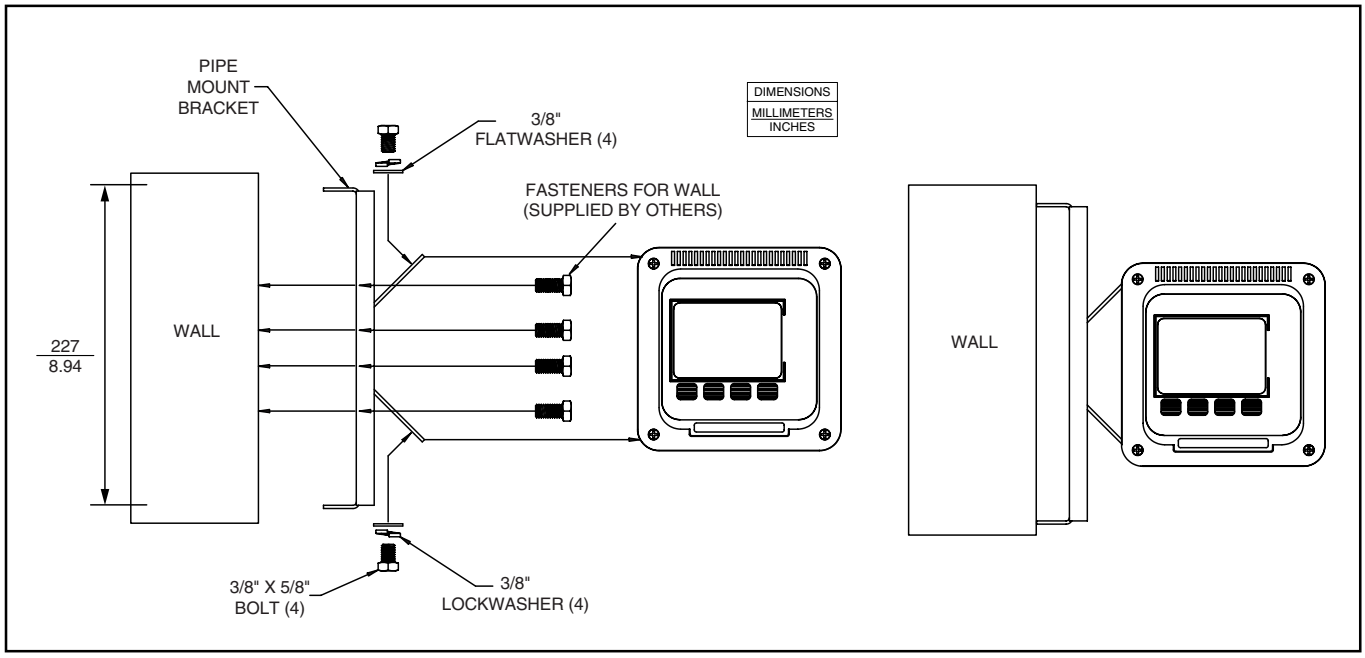

Figure 4. Wall (Side) Mounting

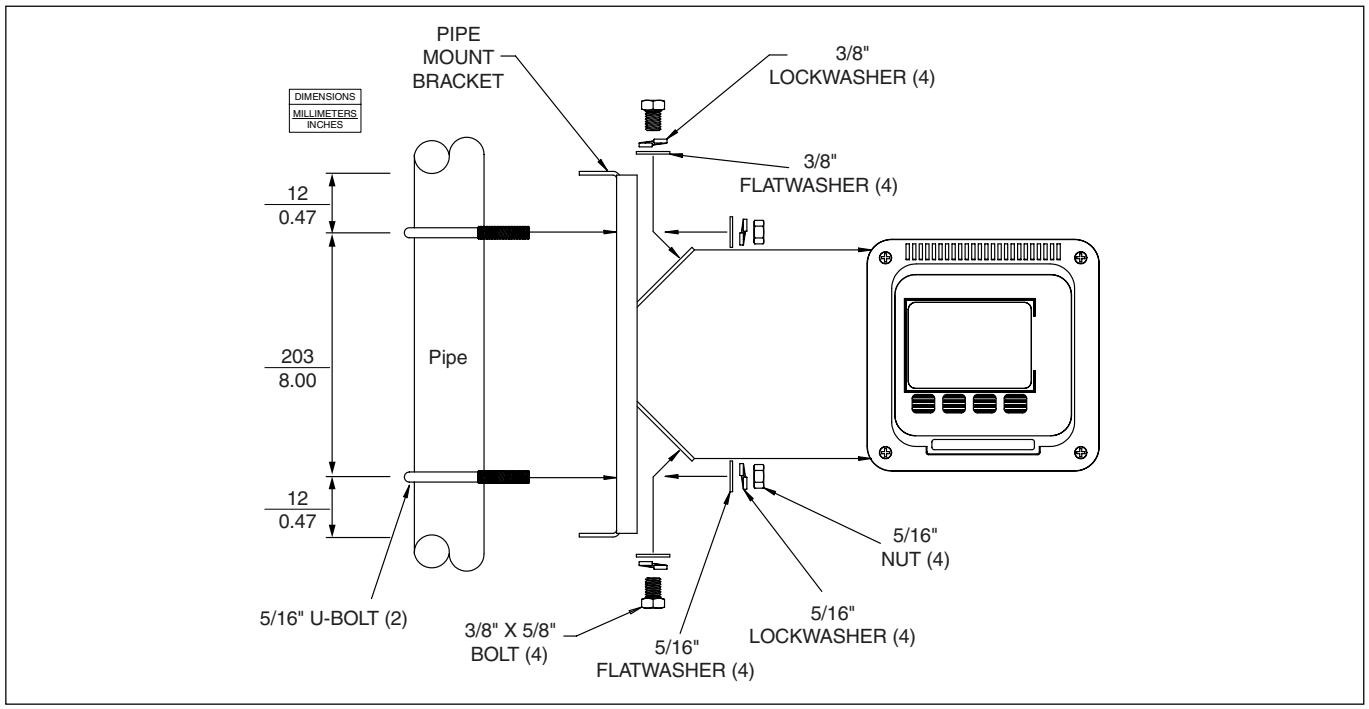

Figure 5. Pipe Mounting

Ordering Information Model Code	T B 8 4 01 - 04	05	06	07	08	09	10	11	12	13
Advantage Series Analyzer (Note 3)										
Input										
Conductivity four-electrode (Note 2)		**E**	**C**							
Conductivity two-electrode (Note 2)		**T**	**E**							
Toroidal conductivity (Note 2)		**T**	**C**							
Programming Options										
Basic				1						
Advanced (Note 1)				2						
Reserved										
For future use					0					
Reserved										
None						0				
Housing Type										
Anodized aluminum, powder coat polyester							0			
Mounting Hardware										
None								0		
Pipe (4TB9515-0124)								1		
Hinge (4TB9515-0125) For Pipe or Wall								2		
Panel (4TB9515-0123)								3		
Wall (4TB9515-0156)								4		
Agency Approval										
None									0	
FM (Factory Mutual)									1	
CSA (Canadian Standards Association)									2	
Identification Tags										
None										0
Stainless Steel (4TB5003-0007)										1
Mylar										2

NOTES:

1. *See TB84EC/TE/TC product specification sheets for details on Advanced programming options.*
2. *Cable grip available separately, part number 4TB9515-0165*
3. *One instruction manual included. Additional copy, part number 4TB9800-84TC, 4TB9800-84EC or 4TB9800-84TE.*

ABB has Sales & Customer Support expertise in over 100 countries worldwide

www.abb.com

The Company's policy is one of continuous product improvement and the right is reserved to modify the information contained herein without notice.

Printed in USA (2.21.06)

© ABB 2006

D-NCA-TB84TE_2

ABB Inc.
125 East County Line Road
Warminster, PA 18974
USA
Tel: +1 215 674 6000
Fax: +1 215 674 7183

ABB Inc.
9716 S. Virginia St., Ste E
Reno, NV 89521
USA
Tel: +1 775 850 4800
Fax: +1 775 850 4808

ABB Limited
Oldends Lane, Stonehouse
Glouchestershire, GL 10 3TA
UK
Tel: +44 (0)1453 826661
Fax: +44 (0)1453 829671