Data Sheet
SS/364GS/AS_1

Field^{IT}

2600T Series Pressure Transmitters

Model 364GS Gauge
Model 364AS Absolute
standard overload

- **Best in class total performance**
  - long term stability of 0.25% for 10 years
  - base accuracy of 0.06%
- **The space saver**
  - the solution for multiple installations in reduced spaces
  - compact solution for explosion proof design
- **The common sense construction**
  - all stainless steel body and housing also for aggressive environment
  - Hastelloy process diaphragms
  - universal transmitter for all applications
- **The user friendly transmitter**
  - user accessible wiring termination with built-in surge protection
  - on board LCD display with intuitive menu navigation
  - "easy setup" for quick commissioning
  - multilanguage menu selection
- **Full compliance with PED Category III**

ABB 364 model
The common sense
pressure transmitter

Functional Specifications

Range and span limits

Sensor Code	Upper Range Limit (URL)	Lower Range Limit (LRL)	Minimum span	
			364GS gauge	364AS absolute
L	250kPa 2500mbar 1000inH_2O	0 absolute	12.5kPa 125mbar 50inH_2O	12.5kPa 125mbar 93.8mmHg
D	1000kPa 10bar 145psi	0 absolute	50kPa 0.5bar 7.25psi	50kPa 0.5bar 375mmHg
U	3000kPa 30bar 435psi	0 absolute	150kPa 1.5bar 21.7psi	150kPa 1.5bar 21.7psi
R	10000kPa 100bar 1450psi	0 absolute	500kPa 5bar 72.5psi	500kPa 5bar 72.5psi
V	60000kPa 600bar 8700psi	0 absolute	3000kPa 30bar 435psi	

Span limits

Maximum span = URL

IT IS RECOMMENDED TO SELECT THE TRANSMITTER SENSOR CODE PROVIDING THE TURNDOWN VALUE AS LOWEST AS POSSIBLE TO OPTIMIZE PERFORMANCE CHARACTERISTICS.

Turndown = upper range limit/span

Zero suppression and elevation

Zero and span can be adjusted to any value within the range limits detailed in the table as long as:

– calibrated span ≥ minimum span

Damping

Selectable time constant : 0 to 32 s
This is in addition to sensor response time

Turn on time

Operation within specification in less than 1s with minimum damping.

Insulation resistance

> 100MΩ at 500VDC (terminals to earth)

Operative limits

Temperature limits °C (°F) :

Ambient (is the operating temperature)

Lower limit: –40°C (–40°F); –20°C (–4°F) for LCD indicator

Upper limit: +85°C (+185°F); +70°C (+158°F) for LCD indicator

Note : For Hazardous Atmosphere applications see the temperature range specified on the certificate/approval relevant to the aimed type of protection

Process

Lower limit: –40°C (–40°F)

Upper limit: 121°C (250°F)

Storage

Lower limit: –50°C (–58°F); –40°C (–40°F) for LCD indicators

Upper limit: +85°C (+185°F)

Pressure limits

Overpressure limits (without damage to the transmitter)

0 abs up to:

– 0.5MPa, 5bar, 72.5psi for sensor code L

– 2MPa, 20bar, 290psi for sensor code D

– 6MPa, 60bar, 870psi for sensor code U

– 20MPa, 200bar, 2900psi for sensor code R

– 90MPa, 900bar, 13050psi for sensor code V

Proof pressure

The transmitter can be exposed without leaking to line pressure of up to the overpressure limit specified above for available sensor.

Environmental limits

Electromagnetic compatibility (EMC)

Comply with EN 61000–6–3 for emission and EN 61000–6–2 for immunity requirements and test;

Radiated electromagnetic immunity level: (according to IEC 1000–4–3, EN61000–4–3)	10V/m
Conducted electromagnetic immunity level : (according to IEC 1000–4-6, EN 61000–4–6)	10V
Surge immunity level: (according to IEC 1000-4–5 EN 61000–4–5)	2kV
Fast transient (Burst) immunity level: (according to IEC 1000–4–4 EN 61000–4–4)	2kV

Humidity

Relative humidity:	up to 100% annual average
Condensing, icing:	admissible
Relative humidity (storage):	up to 75%

Pressure Equipment Directive (PED)

Comply with 97/23/EEC Category III Module H

Vibration resistance

Accelerations up to 1g at frequency up to 1000Hz
(according to IEC 60068–2–6)

Shock resistance

Acceleration:	50g
Duration:	11ms

(according to IEC 60068–2–27)

Degree of protection (Wet and dust-laden atmospheres)

The transmitter is dust and sand tight and protected against immersion effects as defined by EN 60529 (1989) to IP 67 or by NEMA to 4X.

Hazardous atmospheres

With or without integral display
ATEX/ZELM approval
INTRINSIC SAFETY (Category 1): (code E1)
II 1 GD T50°C, EEx ia IIC T6 (–50°C ≤ Ta ≤+40°C) respectively
II 1 GD T95°C, EEx ia IIC T4 (–50°C ≤ Ta ≤+85°C) or
II 1/2 GD T50°C, EEx ia IIC T6 (–50°C ≤ Ta ≤+40°C) respectively
II 1/2 GD T95°C, EEx ia IIC T4 (–50°C ≤ Ta ≤+85°C)
EXPLOSION PROOF (Category 2): (code E2)
II 1/2 GD T50°C, EEx d IIC T6 IP67 T85°C (–50°C ≤ Ta ≤+75°C)
TYPE "N" (Category 3): (included in code EW with E1 and E2)
II 3 GD T50°C, EEx nL IIC T6 IP67 (–50°C ≤ Ta ≤+40°C) or
II 3 GD T95°C, EEx nL IIC T4 IP67 (–50°C ≤ Ta ≤+85°C)
CANADIAN STANDARDS ASSOCIATION (code E4)
FACTORY MUTUAL (code E6)
– Explosionproof: Class I, Div. 1, Groups A, B, C, D
– Dust ignitionproof : Class II, Div. 1, Groups E, F, G
– Suitable for : Class II, Div. 2, Groups F, G; Class III, Div. 1, 2
– Nonincendive: Class I, Div. 2, Groups A, B, C, D
– Intrinsically safe: Class I, II, III, Div. 1, Groups A, B, C, D, E, F, G
AEx ia IIC T6/T4, Zone 0 (FM)
COMBINED ATEX, FM and CSA (code EN)
combination of E1, E2, E4 and E6
COMBINED ATEX (code E7)
combination of E1 and E2
COMBINED NEPSI (code EP)
NEPSI approval
INTRINSIC SAFETY/CHINA:
Ex ia IIC T4-T6
FLAMEPROOF/CHINA:
Ex d IIC T6
TYPE "N"/CHINA
EEx nL IIC T4-T6

Electrical Characteristics and Options

HART digital communication and 4 to 20mA output

Power Supply

The transmitter operates from 10.5 to 42VDC with no load and is protected against reverse polarity connection (additional load allows operations over 42VDC).

For EEx ia and other intrinsically safe approval power supply must not exceed 30VDC.

Minimum operating voltage is 15.3VDC if on terminals for external meter neither link nor remote indicator is present.

Ripple

20mV max on a 250Ω load as per HART specifications

Load limitations

4 to 20mA and HART total loop resistance :

$$R(k\Omega) = \frac{\text{Supply voltage} - \text{min. operating voltage (VDC)}}{22.5\ \text{mA}}$$

A minimum of 250Ω is required for HART communication.

Optional indicators

Integral display

Wide screen LCD, 128 x 64 pixel,
52.5 x 27.2mm (2.06 x 1.07in) dot matrix.

Four keys for configuration and management of device.

Easy setup for quick commissioning.

User selectable application-specific visualizations.

Display also indicates in/out transfer function, sensor temperature and diagnostic messages and provides configuration facilities.

Output signal

Two–wire 4 to 20mA, user-selectable for linear output, power of $^3/_2$ or $^5/_2$, 5th order or two 2nd order switching point selectable programmable polynomial output.

HART® communication provides digital process variable (%, mA or engineering units) superimposed on 4 to 20mA signal, with protocol based on Bell 202 FSK standard.

Output current limits (to NAMUR standard)

Low saturation:	3.8mA (field configurable from 3.7 to 4mA)
High saturation:	20.5mA (field configurable from 20 to 22.5mA)

Alarm current

Low alarm current:	3.7mA (field configurable from 3.7 to 4mA)
High alarm current:	22mA (field configurable from 20 to 22.5mA)
Factory setting:	high alarm current

Performance specifications

Stated at reference condition to IEC 60770 ambient temperature of 20°C (68°F), relative humidity of 65%, atmospheric pressure of 1013hPa (1013mbar), vertical mounting position and zero based range for transmitter with isolating diaphragms in Hastelloy and silicone oil fill and digital trim values equal to span end points, in linear mode.

Unless otherwise specified, errors are quoted as % of span.

The performance data related to the upper range limit (URL) are effected by the actual turndown (TD) as ratio between Upper Range Limit (URL) and calibrated span (URL/span).

IT IS RECOMMENDED TO SELECT THE TRANSMITTER SENSOR CODE PROVIDING THE TURNDOWN VALUE AS LOWEST AS POSSIBLE TO OPTIMIZE PERFORMANCE CHARACTERISTICS.

Dynamic performance (according to IEC 61298–1 definition)

Dead time: 75ms

Time constant (63% of total step change):

– 150 ms (for all sensors)

Response time (total) = dead time + time constant

Accuracy rating

% of calibrated span, including combined effects of terminal based linearity, hysteresis and repeatability.

– ±0.06% for TD from 1:1 to 15:1

– $\pm 0.004\% \times \frac{URL}{Span}$ for TD from 15:1 to 20:1

Operating influences

Ambient temperature

per 20K (36°F) change between the limits of –20°C to +65°C (–4 to +150°F) and TD up to 10:1

± (0.03% URL + 0.05% span)

but not greater than total ± 0.10% of URL from –40°C to +85°C

Supply voltage

Within voltage/load specified limits the total effect is less than 0.005% of URL per volt.

Load

Within load/voltage specified limits the total effect is negligible.

Electromagnetic field

Total effect : less than 0.05% of span from 80 to 1000MHz and for field strengths up to 10V/m when tested with unshielded conduit, with or without meter.

Common mode interference

No effect from 100Vrms @ 50Hz, or 50VDC

Stability

±0.25% of URL over a ten years period

Vibration effect

±0.10% of URL (according to IEC 61298–3)

Physical Specification

(Refer to ordering information sheets for variant availability related to specific model or versions code)

Materials

Process isolating diaphragm (*)

Hastelloy C276™ (NACE)

Process connection (*)

AISI 316 L ss (NACE)

Sensor fill fluid

Silicone oil

Mounting bracket

AISI 304 ss, AISI 316 L ss

Electronic/sensor housing and covers

AISI 304 ss, AISI 316 L ss

Covers O-ring

Buna N

(*) Wetted parts of the transmitter

Calibration

Standard: at maximum span, zero based range, at ambient temperature and pressure;

Optional: at specified range.

Optional extras

Mounting brackets

For vertical and horizontal 60mm. (2in) pipe or wall mounting.

Display

4-position (at 90°) user rotable

Additional customer plate (option code I2)

AISI 316 ss plate wired-on to the transmitter for customer data up to a maximum of 32 characters and spaces per four lines for customizable details.

Test Certificates (test, design, calibration, material traceability)

Tag and manual language

Electrical connection metal plug

One stainless steel IP67 plug can be supplied on request, replacing one of the temporary plastic plug.

Process connection

½ – 14 NPT female or male; DIN EN 837-1 G 1/2 B.

Electrical connections

Two ½ – 14 NPT or M20x1.5 threaded conduit entries, direct on housing.

Terminal block

Three terminals for signal/external meter wiring up to 2.5mm^2 (14AWG)

Grounding

Internal and external 6mm^2 (10AWG) ground termination points are provided.

Mounting position

Transmitter can be mounted in any position.

Mass (without options)

approx 1.7kg (3.7lb)
add approx 1.2kg (2.5lb) for packing.

Packing

Carton 28 x 23 x 25cm approx (11 x 9 x 9.8in).

Configuration

Transmitter with HART communication and 4 to 20 mA

Standard configuration

Transmitters are factory calibrated from 0 to +URL. If required calibrated range and tag number are stamped on the tag plate. If a calibration range and tag data are not specified, the transmitter will be supplied with the plate left blank and configured as follows:

Engineering Unit	kPa
4 mA	Zero
20 mA	Upper Range Limit (URL)
Output	Linear
Damping	1 sec.
Transmitter failure mode	Upscale
Software tag characters	Blank
Optional LCD integral display	Input pressure (linear) in calibration engineering unit plus analog output after transfer function in percentage on bargraph

Any or all the above configurable parameters, including Lower range–value and Upper range-value which must be the same unit of measure, can be easily changed using the HART hand–held communicator or by a PC, running the configuration software SMART VISION with DTM for 2600T. The transmitter database is customized with specified measuring mechanism data, material and meter code option.
Custom configuration (option).
The following data may be specified in addition to the standard configuration parameters:

Descriptor	16 alphanumeric characters
Message	32 alphanumeric characters
Date	Day, month, year

Electrical connections

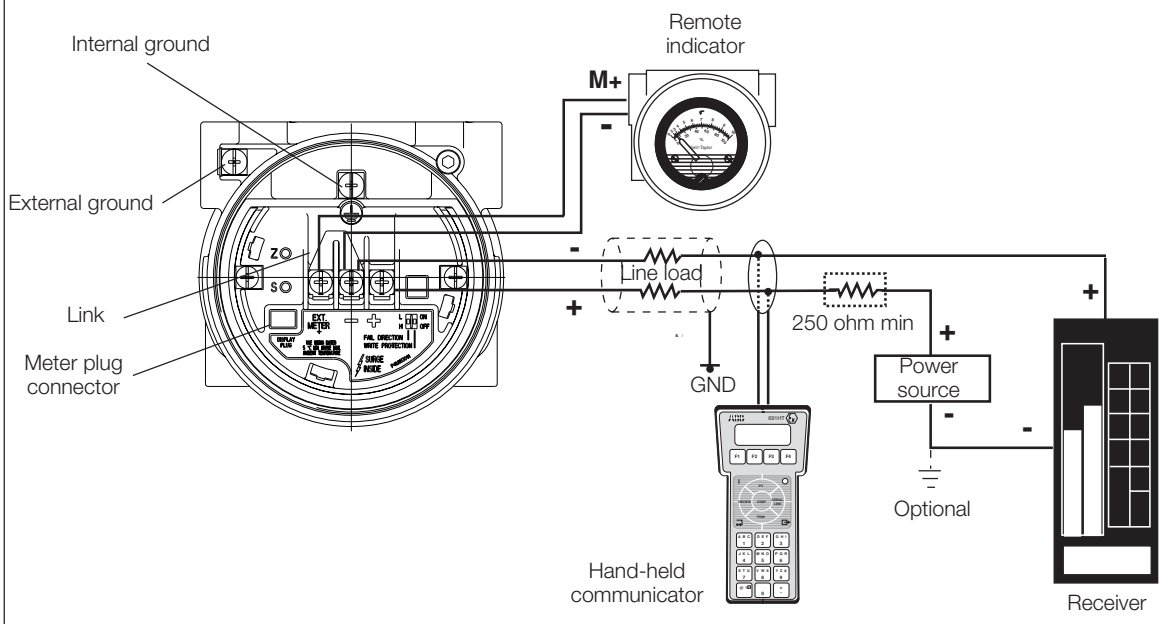

HART hand-held communicator may be connected at any wiring termination point in the loop, providing the minimum resistance is 250 ohm. If this is less than 250 ohm, additional resistance should be added to allow communications.

MOUNTING DIMENSIONS (not for construction unless certified) – dimensions in mm (in)

Transmitter with blind/display cover

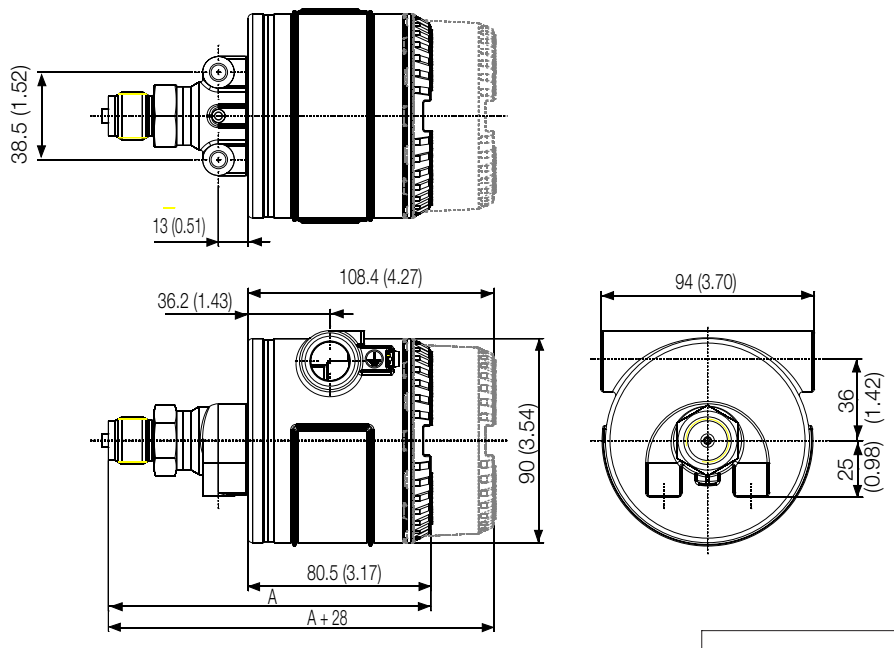

Process connection	Dimension "A"
1/2-14 NPT male thread	142
1/2-14 NPT female thread	137.5 (141 sensor code V)
DIN EN 837-1 G 1/2 B	142

Transmitter with bracket on vertical pipe (mounting examples)

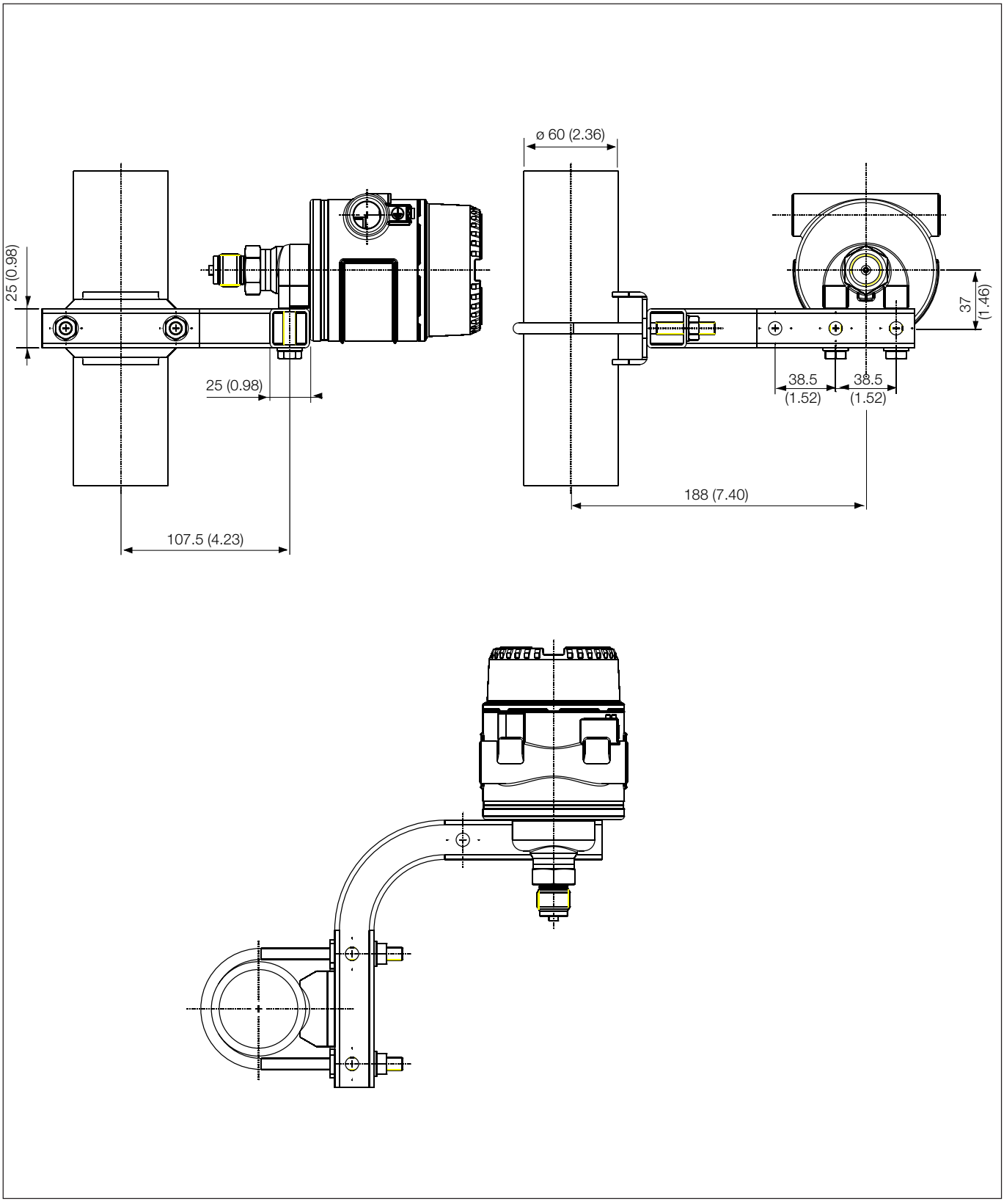

Transmitter with bracket on horizontal pipe (mounting examples)

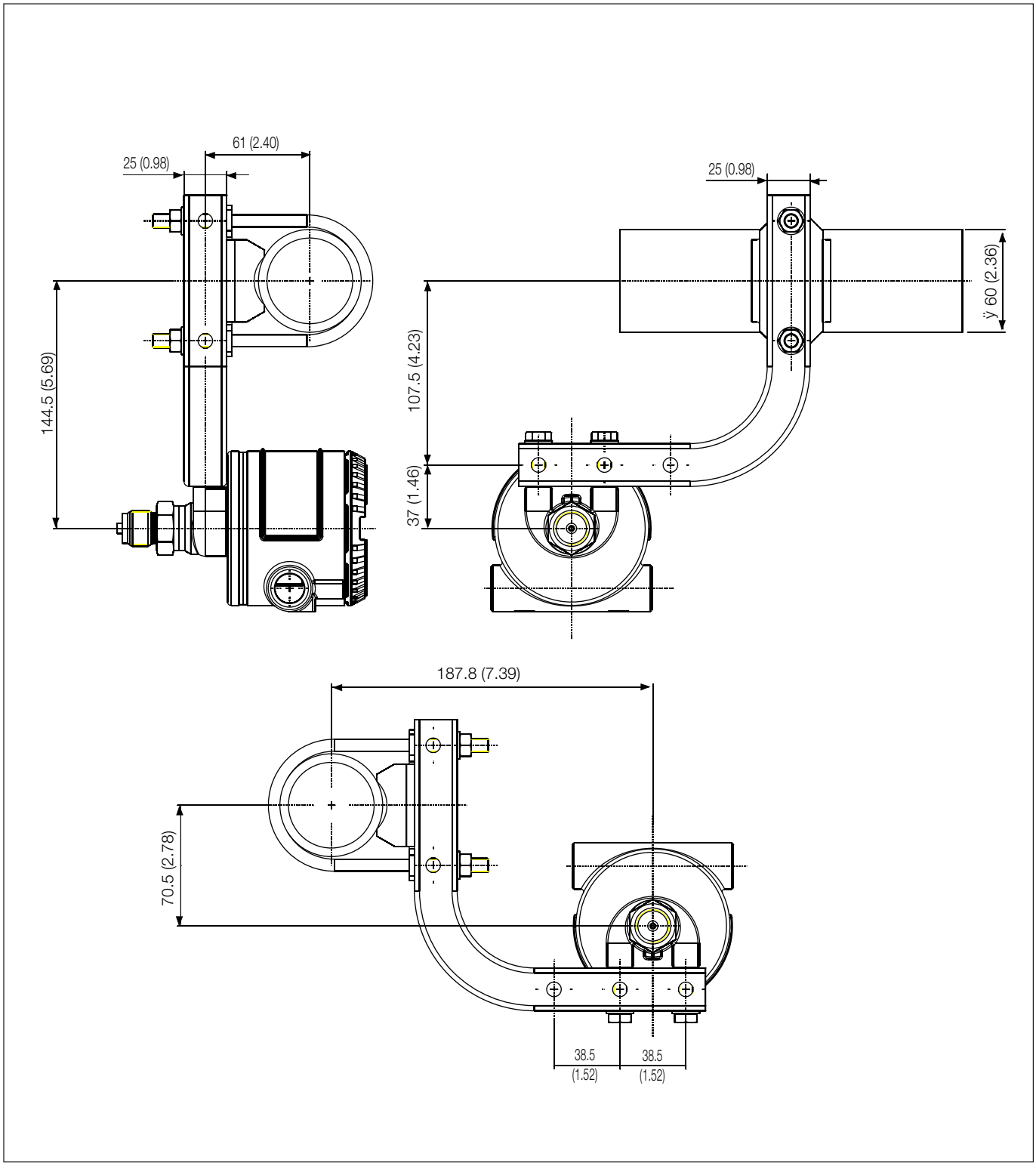

Transmitter with bracket for wall mounting

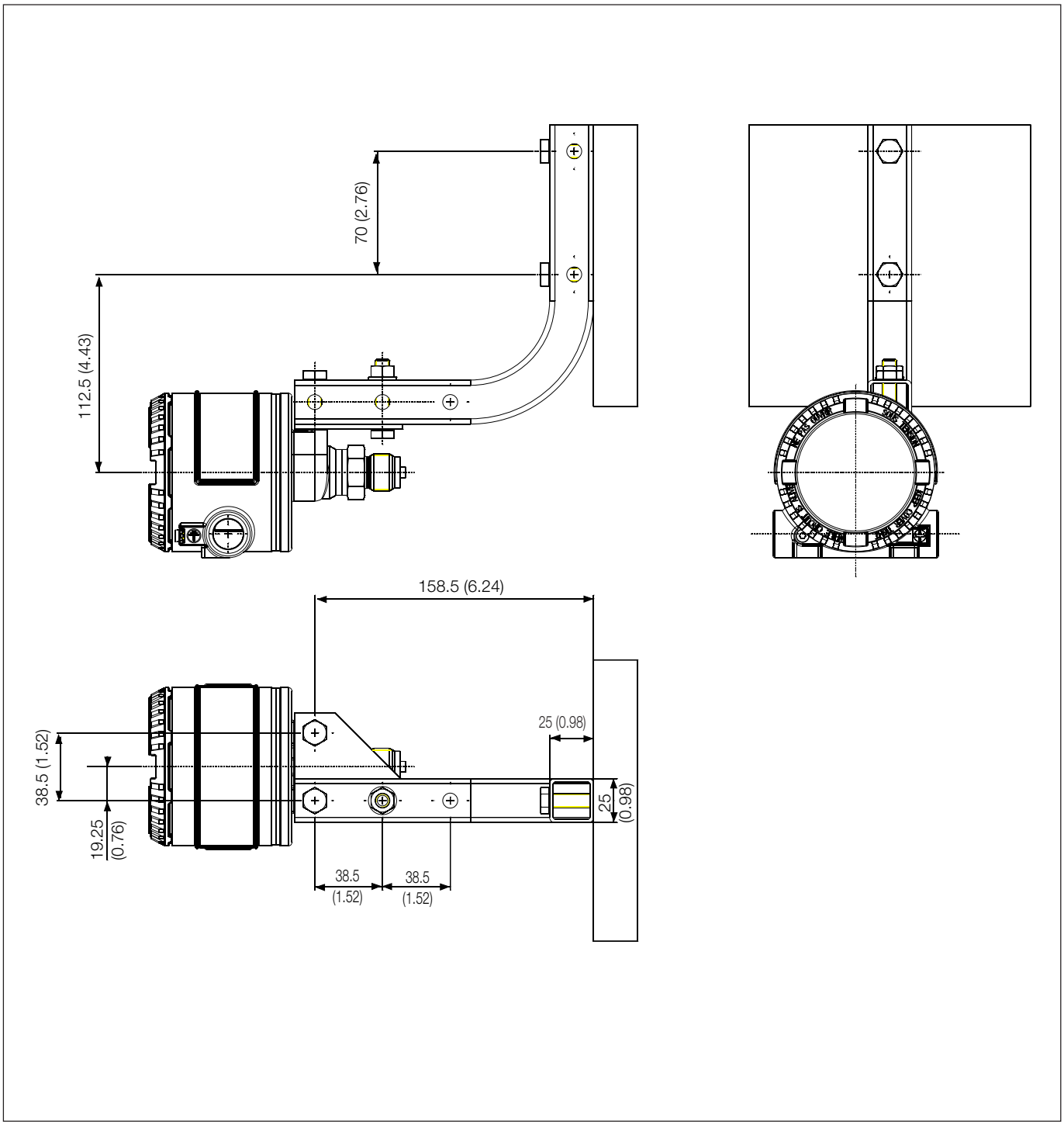

BASIC ORDERING INFORMATION model 364GS Gauge and 364AS Absolute Pressure Transmitters

Select one character or set of characters from each category and specify complete catalog number.
Refer to additional ordering information code and specify one or more codes for each transmitter if additional options are required.

BASE MODEL – 1st to 5th characters								X	X	X	X	X
Gauge Pressure Transmitter – BASE ACCURACY 0.06%				**3**	**6**	**4**	**G**	**S**				
Absolute Pressure Transmitter – BASE ACCURACY 0.06%				**3**	**6**	**4**	**A**	**S**				
SENSOR - Span limits – 6th character												
12.5 and 250kPa	125 and 2500mbar	50 and 1000inH2O (93.8 and 1875 mmHg)							L			
50 and 1000kPa	0.5 and 10bar	7.25 and 145psi							D			
150 and 3000kPa	1.5 and 30bar	21.7 and 435psi							U			
500 and 10000kPa	5 and 100bar	72.5 and 1450psi							R			
3000 and 60000kPa	30 and 600bar	435 and 8700psi	(only for mod. 364GS)						V			
Diaphragm material / Fill fluid (wetted parts) – 7th character												
Hastelloy C276™ (on AISI seat)		Silicone oil				NACE				K		
Process connection material and connection (wetted parts) – 8th character												
AISI 316 L ss		1/2 – 14 NPT female				NACE					B	
AISI 316 L ss		DIN EN 837-1 G 1/2 B				NACE					P	
AISI 316 L ss		1/2 – 14 NPT male				NACE					T	
Housing material and electrical connection – 9th character												
AISI 304 ss		1/2 – 14 NPT										S
AISI 304 ss		M20 x 1.5 (CM20)										T
AISI 316 L ss		1/2 – 14 NPT										3
AISI 316 L ss		M20 x 1.5 (CM20)										4
Output/Additional options – 10th character												
HART digital communication and 4 to 20mA		No additional options										H
HART digital communication and 4 to 20mA		Options requested (to be ordered by "Additional ordering code")										1

ADDITIONAL ORDERING INFORMATION for models 364GS and 364AS

Add one or more 2-digit code(s) after the basic ordering information to select all required options

	XX	XX	XX	XX	XX	XX	XX	XX	XX	XX
Electrical certification										
Combined ATEX (EEx ia and EEx d) plus FM plus CSA	EN									
Combined ATEX - Intrinsic Safety and Flameproof	E7									
Combined ATEX - Intrinsic Safety, Flameproof and Type "N"	EW									
Combined NEPSI - Intrinsic Safety, Flameproof and Type "N"	EP									
ATEX Group II Category 1 GD - Intrinsic Safety EEx ia	E1									
ATEX Group II Category 1/2 GD - Flameproof EEx d	E2									
Canadian Standard Association (CSA)	E4									
Factory Mutual (FM) approval	E6									
Integral LCD										
Digital LCD integral display		L1								
Mounting bracket										
AISI 304 ss for pipe mounting			B2							
AISI 304 ss for wall mounting			B4							
AISI 316 L ss for pipe mounting			B8							
AISI 316 L ss for wall mounting			B9							
Operating manual										
German				M1						
Italian				M2						
Operating manual										
German					T1					
Italian					T2					
Additional customer plate										
Laser printing of customer data on wired-on stainless steel plate						I2				
Configuration										
Standard – Pressure = inH_2O/psi at 20° C; Temperature = deg. F							N2			
Standard – Pressure = inH_2O/psi at 4° C; Temperature = deg. F							N3			
Standard – Pressure = inH_2O/psi at 20° C; Temperature = deg.C							N4			
Standard – Pressure = inH_2O/psi at 4° C; Temperature = deg. C							N5			
Custom							N6			
Certificates										
Inspection certificate EN 10204-3.1 of calibration								C1		
Certificate of compliance with the order EN 10204-2.1 of instrument design								C6		
Material traceability										
Certificate of compliance with the order EN 10204-2.1 of process wetted parts									H1	
Inspection certificate EN 10204-3.1 of process wetted parts									H3	
Electrical connection plug										
Stainless steel blind plug (General purpose only)										Z1
Stainless steel blind plug (EEx d - Electrical certification code E2 only)										Z2

™ Hastelloy is a Cabot Corporation trademark

Standard delivery items (can be differently specified by additional ordering code)

- General purpose (no electrical certification)
- Temporary plastic electrical connection blind plugs (two no Ex)
- No display, no mounting bracket
- English manual and labels
- Configuration with kPa and deg. C units
- No test, inspection or material traceability certificates

THE SELECTION OF SUITABLE WETTED PARTS AND FILLING FLUID FOR COMPATIBILITY WITH THE PROCESS MEDIA IS A CUSTOMER'S RESPONSIBILITY, IF NOT OTHERWISE NOTIFIED BEFORE MANUFACTURING.

ABB has Sales & Customer Support
expertise in over 100 countries worldwide

www.abb.com/instrumentation

The Company's policy is one of continuous product improvement and the right is reserved to modify the information contained herein without notice.

Printed in Italy (04.08)

© ABB 2008

SS/364GS_AS_1

ABB Ltd
Howard Road, St. Neots
Cambridgeshire, PE19 8EU
UK
Tel: +44(0)1480 475321
Fax: +44(0)1480 217948

ABB Inc.
125 E. County Line Road
Warminster, PA 18974
USA
Tel: +1 215 674 6000
Fax: +1 215 674 7183

ABB SACE
A division of ABB S.p.A.
Via Statale 113
22016 Lenno (CO) Italy
Tel: +39 0344 58111
Fax: +39 0344 56278